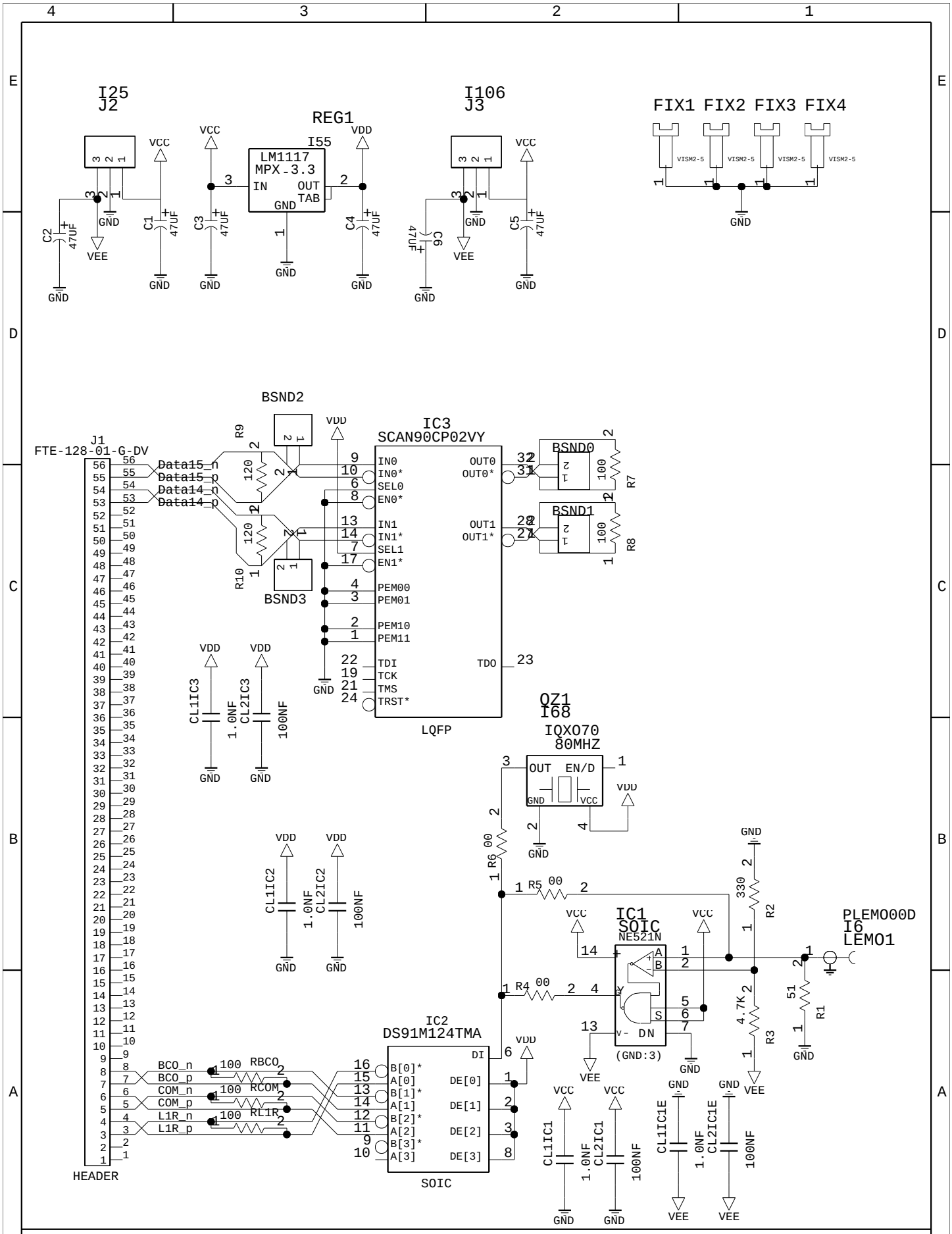

REF:

DRAWING

M-LVDS MULTIDROP BUS

DRIVE BOARD

ETUDE: D. LA MARRA	PAGE: 1/1
DESSIN: D. LA MARRA	DATE: 29/10/2010

LAST_MODIFIED=Mon Nov 08 11:23:24 2010