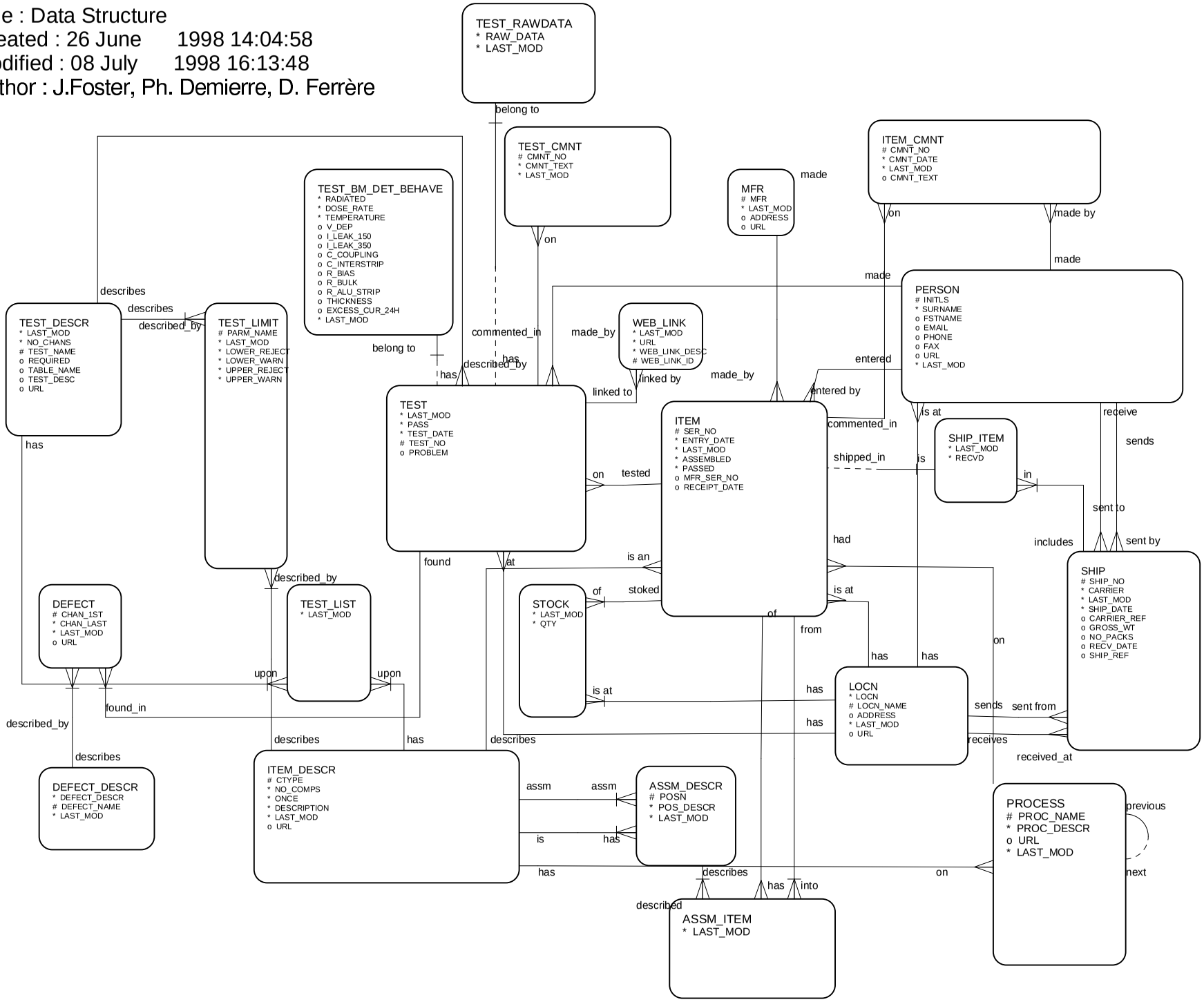Title : Data Structure
Created : 26 June 1998 14:04:58
Modified : 08 July 1998 16:13:48
Author : J.Foster, Ph. Demierre, D. Ferrère