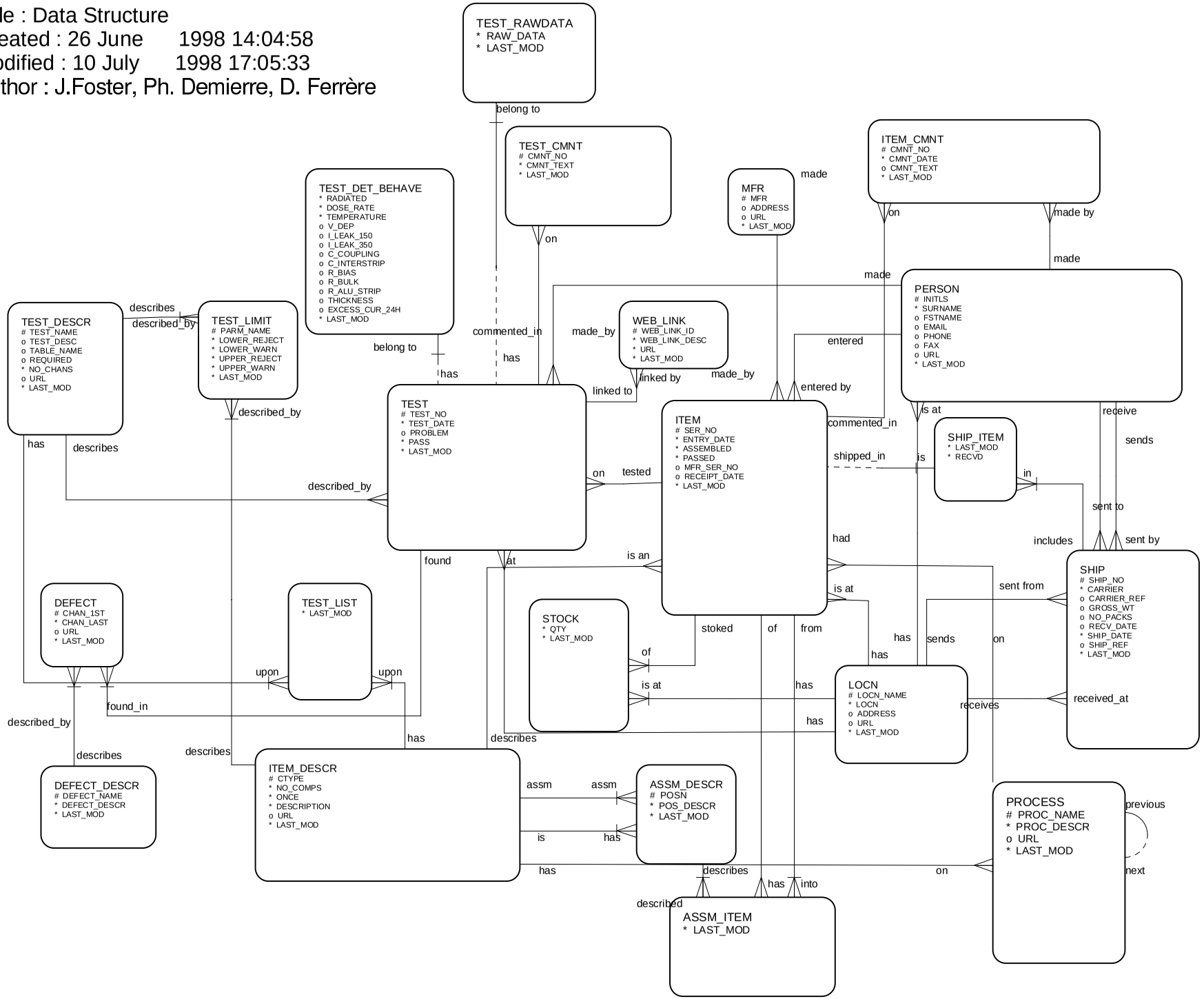Title : Data Structure
Created : 26 June 1998 14:04:58
Modified : 10 July 1998 17:05:33
Author : J.Foster, Ph. Demierre, D. Ferrère