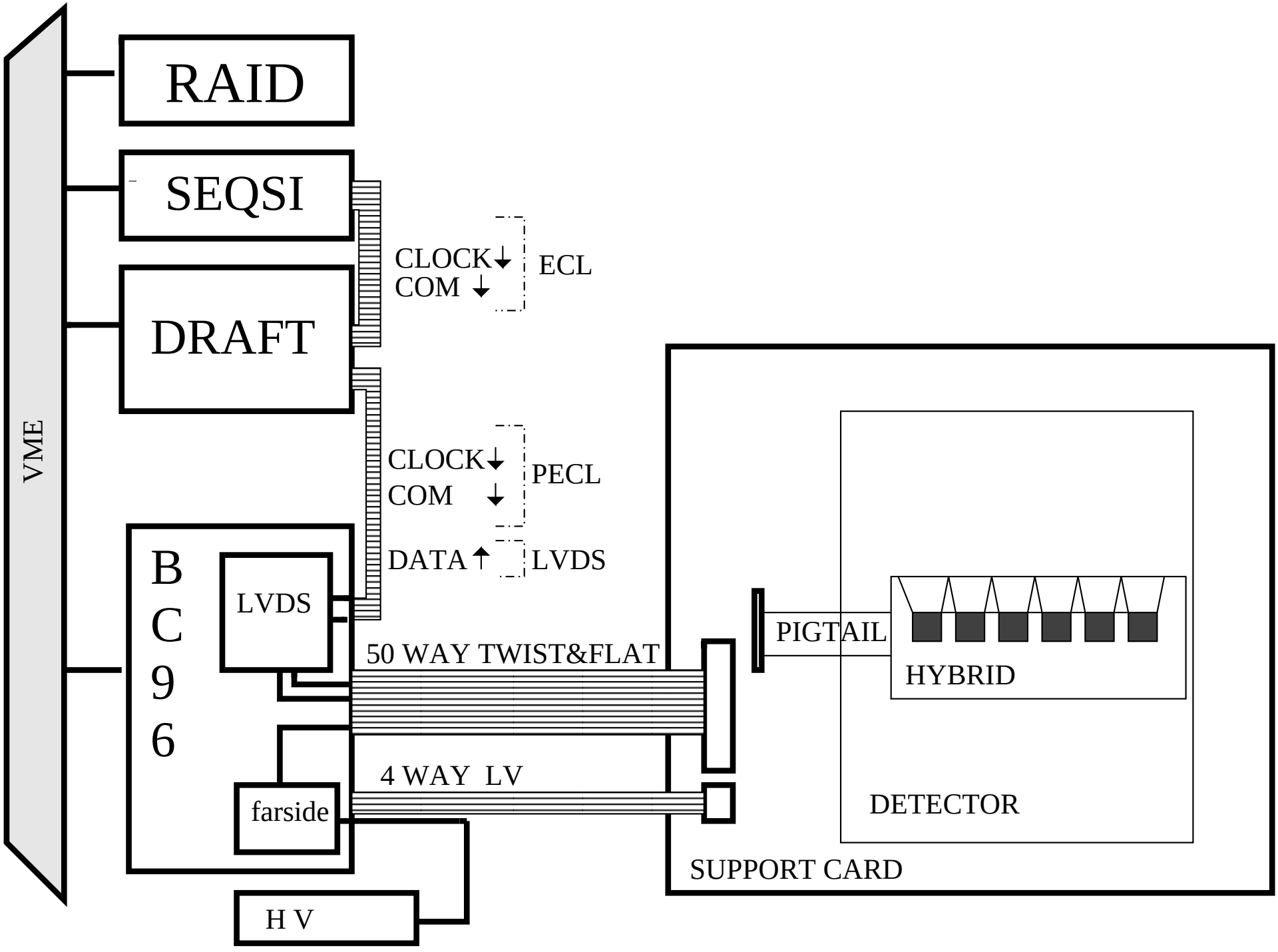
VME
RAID
SEQSI
DRAFT
CLOCK
COM
ECL
CLOCK
COM
PECL
DATA
LVDS
B
C
9
6
LVDS
farside
H V
50 WAY TWIST&FLAT
4 WAY LV
PIGTAIL
HYBRID
DETECTOR
SUPPORT CARD